Uniclass
Pr_40_20_93_79

CI/SfB
(74) Xn

Cistermiser

OUR WORLD IS WATER

Specification Catalogue

Urinal Flushing

Toilet Flushing

Infrared Taps

Washroom Control

Limescale Prevention

Remote Monitoring

Contents

Cistermiser Overview 2-5

Water Efficiency 6-7

BREEAM 8-10

Our Products **11**

Urinal Flushing **12-13**

Hydraulic Valve 14-17

Infrared Control (IRC®) Valve 18-21

Direct Flush 22-25

Toilet Flushing **26-27**

Easyflush (Wave and Walkaway) 28-33

Easyflush Direct 34-37

Infrared Taps **38-39**

Novatap and Vectatap 40-43

Washroom Control **44-45**

Sensazone 46-49

Limescale Prevention **50-51**

Combimate 52-55

Remote Monitoring **56-57**

LinkThru TMU 58-63

Contact Information **64**

Cistermiser has been designing and manufacturing a range of high quality, cost effective, water-efficient products for over 35 years.

Our early days

The company developed its first product, a hydraulic urinal flush control valve, in 1976 at a time when there were no regulations stipulating that companies had to minimise water consumption in the washroom.

The desire to conserve water and promote washroom hygiene is the key driver of Cistermiser's ongoing investment in new product development.

Cistermiser today

Today the Cistermiser name is synonymous with quality and reliability and has become a generic term for all urinal flush controls. We now offer solutions for commercial, industrial and public sector washroom environments where security, hygiene and cost reductions are required.

Research and development

Two low pressure derivatives of the hydraulic valve were developed during the 1980s before the company added its first domestic product, a limescale prevention device called Combimate, to its range in 1987.

Investment in R&D led to the development of electronic technologies and the company launched a complete washroom control and the infrared urinal flush control valve in the early 1990s.

In recent years, the company's product portfolio has expanded into all areas of the washroom with a range of WC and urinal flushing devices, a series of infrared taps and Sensazone; an advanced system to manage water and energy.

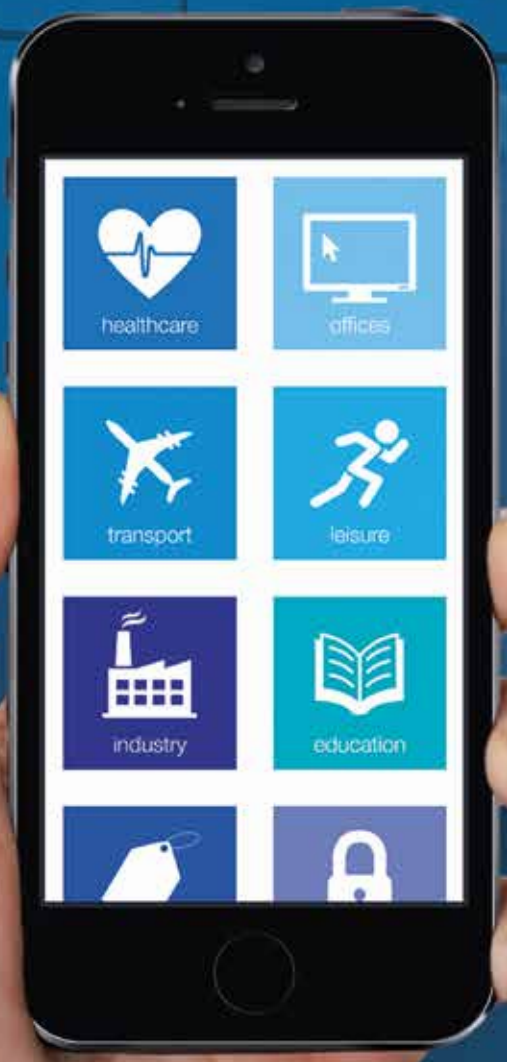

Cistermiser has a range of products which control all the water outlets in a commercial washroom. Several of our products can also be used in domestic applications. Our Specification Catalogue is designed as a guide to help you choose the most appropriate product for your particular application.

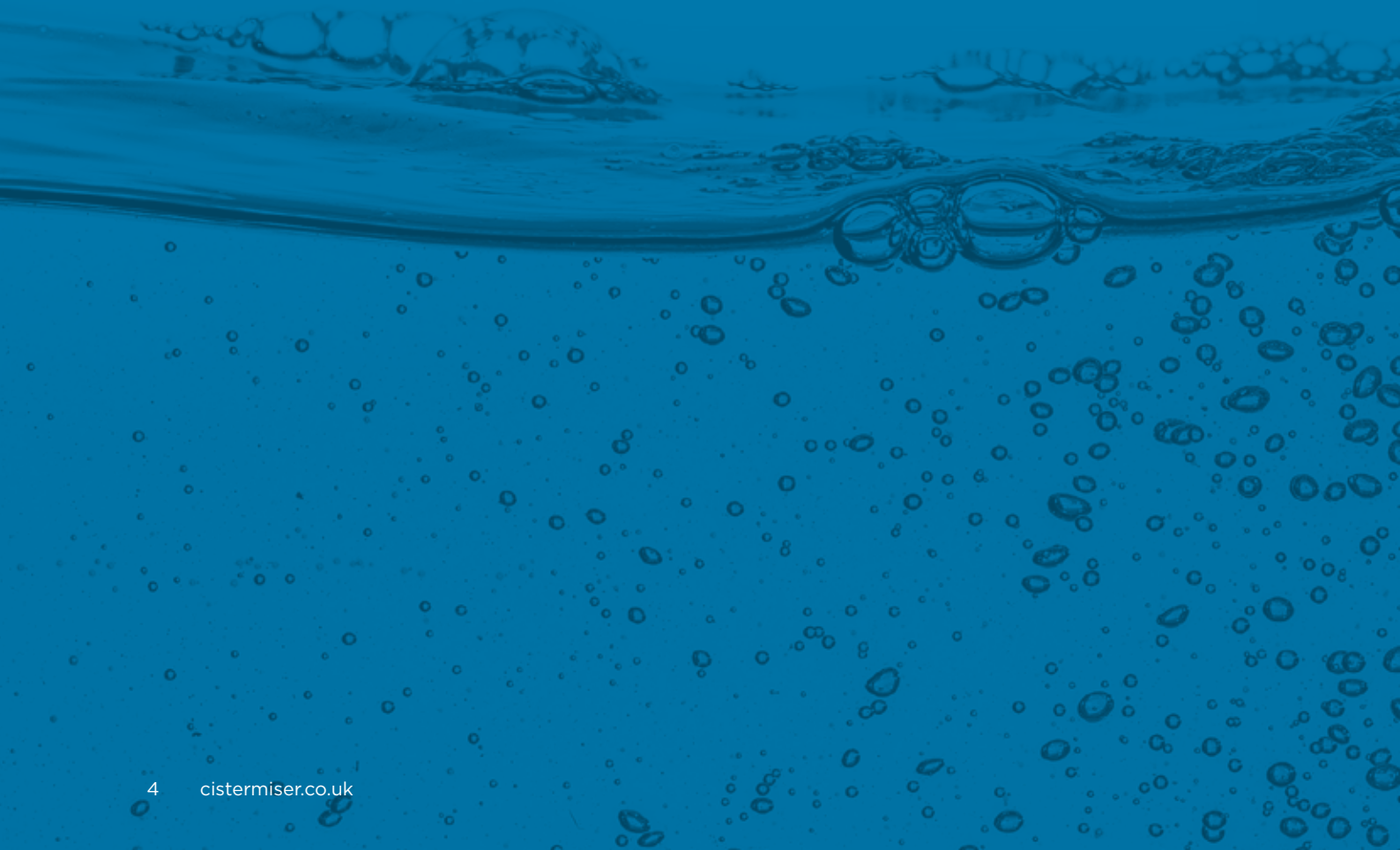

Urinal Flushing
Our range of urinal flush control valves includes the Hydraulic urinal flush control valve, and electronic Infrared Control valve for use in urinal installations where a cistern is used to flush the urinal.

The Direct Flush urinal valve is an 'intelligent' product which detects when someone is using the urinal and only flushes after that person has left it. This valve has been specifically designed for flushing urinals directly from the (mains) water supply.

Infrared Taps
Cistermiser's range of infrared taps, Novatap and Vectatap, are deck-mounted chrome basin outlets with the benefit of hygienic hands-free operation.

Washroom Control
Cistermiser's Sensazone range controls the water supply, lighting and extractor fans within the washroom. Our Sensazone product controls the supply of hot, cold and rain or grey water into the washroom, isolating the supplies in vacant periods.

Toilet Flushing
Easyflush is a no-touch WC flushing valve with dual flush from a single sensor. We also offer EasyFlush Direct, allowing toilets to be flushed directly from the (mains) water supply.

Limescale Prevention
Cistermiser also manufactures Combimate, a limescale prevention device for use with combination boilers and whole house water heaters in domestic settings.

Remote Monitoring
LinkThru TMU harnesses the power of the Internet of Things (IoT) to monitor water temperatures and help to ensure Building Owner compliance with HSG274, reducing risk of Legionella.

Technical Support
Our technical support team is trained to deal with any technical queries or issues with our products post installation.

Quality & Warranty Information
All Cistermiser products are manufactured under Quality Management Systems certified to ISO.9001:2015. The warranty can be extended, free of charge, to three years from date of installation by returning the completed warranty card after commissioning the product.

Water efficiency

Despite the chronic shortage of water storage facilities in the UK, each individual still uses approximately 150 litres per day; this figure increases to over 3,400 litres per person every day when embedded water consumption is considered.

Our commitment

Cistermiser has a long-established record of dedication to conserving water; our first water-saving product was launched soon after the 1976 drought. We have always recognised the need to reduce water wastage and our product range reflects this commitment. Our infrared range of products has been recognised as "water efficient" under the European Water Label Scheme.

We have developed a water efficiency rating chart to show just how much water our products save compared to standard products. The chart below indicates the achievable savings as a result of installing one of our urinal flush controls (see pages 14-25 for more details).

Stats

- Water usage in the UK has been rising by 1% a year since 1930.
- 1.2 billion litres of water are flushed needlessly away every day in the UK.
- Urinals operating without flush controls can use up to 160,000 litres of water a year.
- Millions of WCs installed in the UK have a flush capacity of 13 litres or even more.
- A conventional tap installed in typical commercial premises can use over half a million litres of water a year.

Water Efficiency Rating

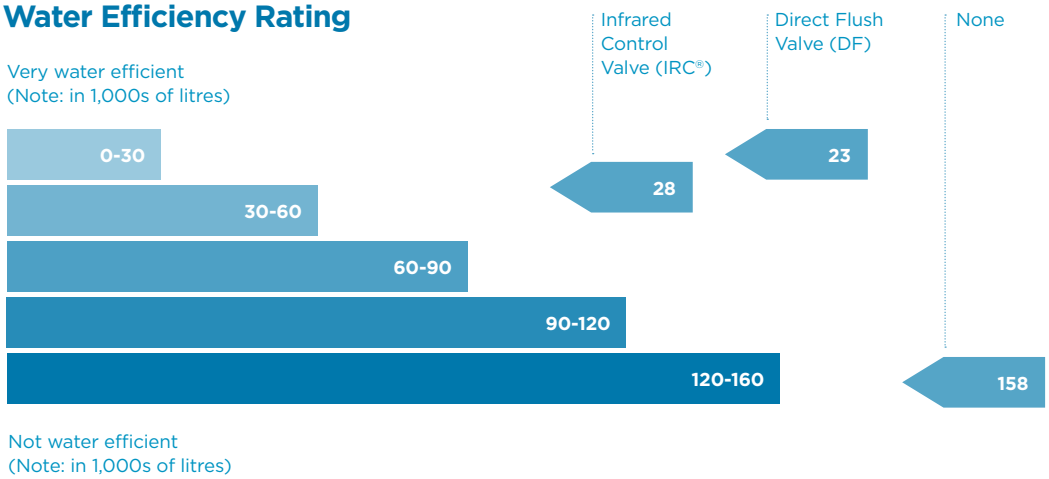

FACT

"The key to water efficiency is reducing waste, not restricting use."

waterwise

BREEAM®

BREEAM (Building Research Establishment Environmental Assessment Method) can be used to assess the environmental performance of any type of building (new and existing).

Standard versions exist for common building types. Less common building types can be assessed against tailored criteria under the Bespoke BREEAM version. Buildings outside the UK can also be assessed using BREEAM International.

These versions all look at the same broad range of environmental impacts:

- Management
- Health & Wellbeing
- Energy
- Transport
- Water
- Material & Waste
- Land Use and Ecology
- Pollution

Credits are awarded in each of the above areas according to performance. A set of environmental weightings then enables the credits to be added together to produce a single overall score.

The building is then rated on a scale of: Pass, Good, Very Good, Excellent and Outstanding, and a certificate is awarded to the development.

As part of our commitment to water conservation, we have assessed how our products can help a building design achieve BREEAM credits and hence a higher overall BREEAM rating. To achieve an Outstanding rating for example, a building design will need to obtain 2 credits under the Wat 01 category.

You will find further details, which can also be used to justify your choice of products, in the following pages.

Helpful links to BREEAM and Cistermiser information:

Further information on the BREEAM categories and how Cistermiser products can help achieve BREEAM credits within the categories is available online at www.cistermiser.co.uk/specification

The BREEAM Pre-Assessment estimators outline the requirements to achieve BREEAM credits. To download the estimators you will need to register on: www.breeam.org/index

BREEAM: **Infrared Products**

The Cistermiser infrared range can help a building design gain BREEAM credit ratings under the Water and Health & Wellbeing categories.

BREEAM CATEGORY	PRODUCT	PERFORMANCE
Wat 01 Where evidence provided demonstrates that the specification includes taps, urinals, WCs and showers that consume less potable water in use than standard specifications for the same type of fittings.	• Easyflush WC cistern valve • Easyflush Direct WC control valve	• Standard 6 litre full flush with an adjustable part flush giving an effective flush volume of 4.5 litres. • Easyflush provides a linked flush and fill function (delayed action inlet valve operation). • Full flush adjustable to 4 litres with a subsequent reduction in part flush giving an effective flush volume of 3 litres. • Each flush uses as little as 0.5 litres.
	• Direct Flush (Discreet and Accessible) urinal control valve	• Flush arrest function to reduce water consumption further during periods of high use. • Programmable for flush duration, sensing range and has a hygiene rinse function. • Cleaner's function.
	• Novatap • Vectatap	• Regulated flow of either 5 litres or 3.5 litres per minute. • Programmable run-on.
Hea 12 Where hot and cold water systems have been designed or actions taken to minimise risks of microbial contamination.	• Novatap • Vectatap	• Used with Thermostatic Mixing Valves, the periodic hygiene rinse function prevents the warm, mixed water from stagnating. • Reduces the risk of microbial contamination such as legionella.

Note: Waterless and flush-free urinals. Due to overriding health and safety concerns in some healthcare facilities, the specification of waterless and flush-free urinals may not be feasible. In such cases, the lowest hygienic water consumption by urinals can be achieved with other products such as ultra low flush volume or infrared proximity-sensing urinal flush controls. Cistermiser's Direct Flush products will deliver the appropriate levels of hygiene and water consumption and earn the same BREEAM credits. Please refer to our website www.cistermiser.co.uk/specification for further information on the BREEAM categories and a more detailed explanation of how the credits are achieved.

BREEAM: **Washroom Control**

The Cistermiser Sensazone range helps building designs gain BREEAM credit ratings under three distinct categories as well as providing additional washroom management functions.

BREEAM CATEGORY	PRODUCT	PERFORMANCE
Hea 06 Where evidence provided demonstrates that, in all relevant building areas, lighting is appropriately zoned and occupant controllable with the option for commonly required lighting settings to be selected quickly and easily.	• Sensazone	• Controls the lighting in the washroom zone so that lights are on only when users are present. • Lighting is automatically switched on when a user is detected.
Ene 04 Where energy efficient external luminaires are fitted and all light fittings are controlled for the presence of daylight.	• Sensazone	• A daylight sensor is fitted within the unit to provide switching only when the level of natural lighting is insufficient.
Wat 03 Where evidence is provided to demonstrate that proximity detection shut-off is provided to the water supply to all toilet areas.	• Sensazone	• The system offers proximity shut-off of both hot and cold water supplies to the washroom.
	• Sensazone	• The unit provides proximity shut-off for the hot and cold and rain/grey water supply.

Our Products

This catalogue details our extensive range, with a comprehensive technical overview of each product.

Urinal Flushing

Hydraulic Valve	14
Infrared Control (IRC®) Valve	18
Direct Flush	22

Toilet Flushing

Easyflush (Wave and Walkaway)	28
Easyflush Direct	34

Infrared Taps

Novatap and Vectatap	40

Washroom Control

Sensazone	46

Limescale Prevention

Combimate	52

Remote Monitoring

LinkThru TMU	58

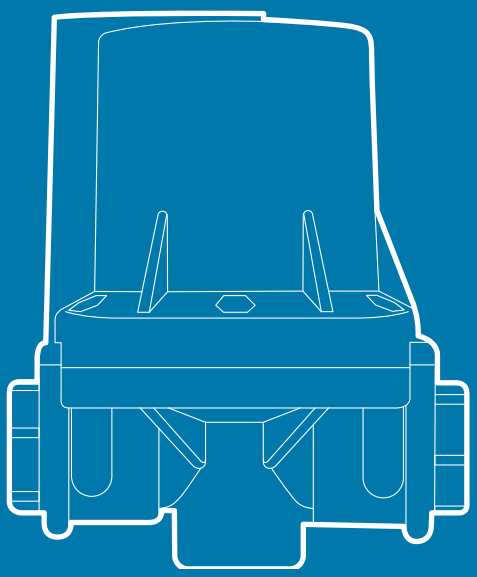

Cistermiser

Urinal Flushing

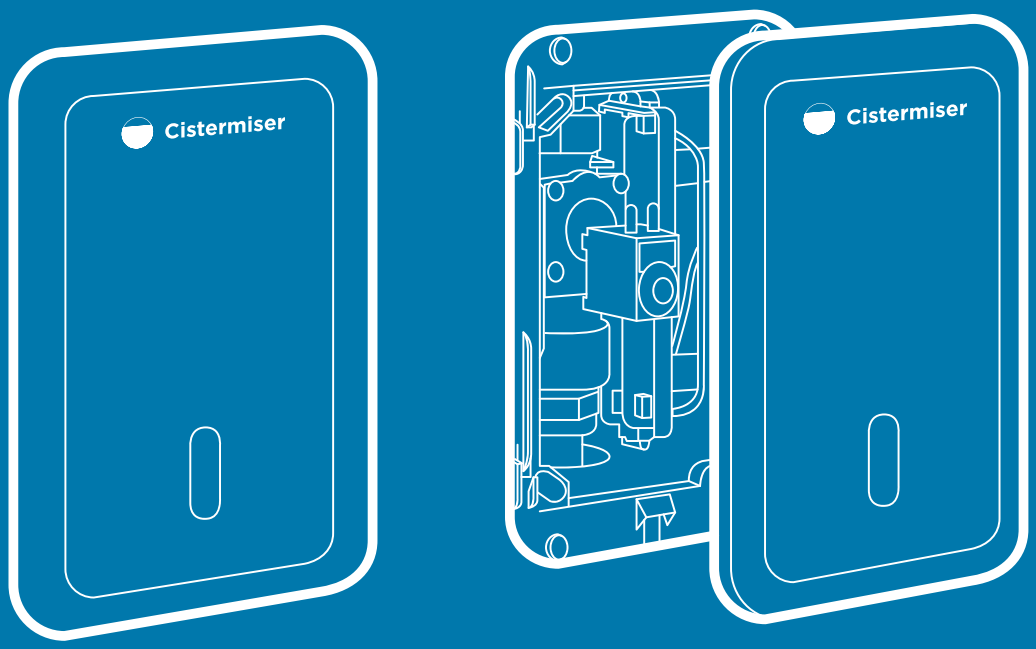

Hydraulic Valve
Urinal flush control valve

Reduce water consumption and washroom odours

- Automatic urinal flush control.
- Unique hydraulic mechanism – no electrical supply or batteries required.
- Industry leader with half a million already installed.
- 'Fit and forget' quality and reliability.
- Hygiene flush option for periods of non-use.
- Ensures compliance with the Water Regulations.
- On DEFRA's ECA Water Technology List; purchase and installation are tax deductible.

WRAS APPROVED PRODUCT

The Hydraulic Valve is an automatic urinal flush control valve. The valve uses a unique and simple mechanism which prevents water waste by ensuring that the auto-flush cistern is only filled, and can only flush, when the washroom is used.

How it works

The Cistermiser Hydraulic Valve is installed on the supply pipe to the urinal cistern. The valve is activated by short-term pressure drops created by use of taps or WCs on the same supply. The valve is normally closed; when it is activated it opens and water passes to the urinal cistern until the pressures on both sides of the valve are equalised. When the cistern is full, the auto-siphon will flush.

Product information

- The valve is installed on the supply pipe to the urinal cistern.
- The installer or user can adjust the time the valve remains open and therefore how long the cistern takes to fill and how much water is used. When the washroom is not being used the water supply pressure remains constant and the valve remains closed, preventing water passing into the cistern.
- The cistern can therefore only flush during periods when the washroom is in use, eliminating unnecessary water consumption and cost.

The Cistermiser Hydraulic Valve consists of three main elements:

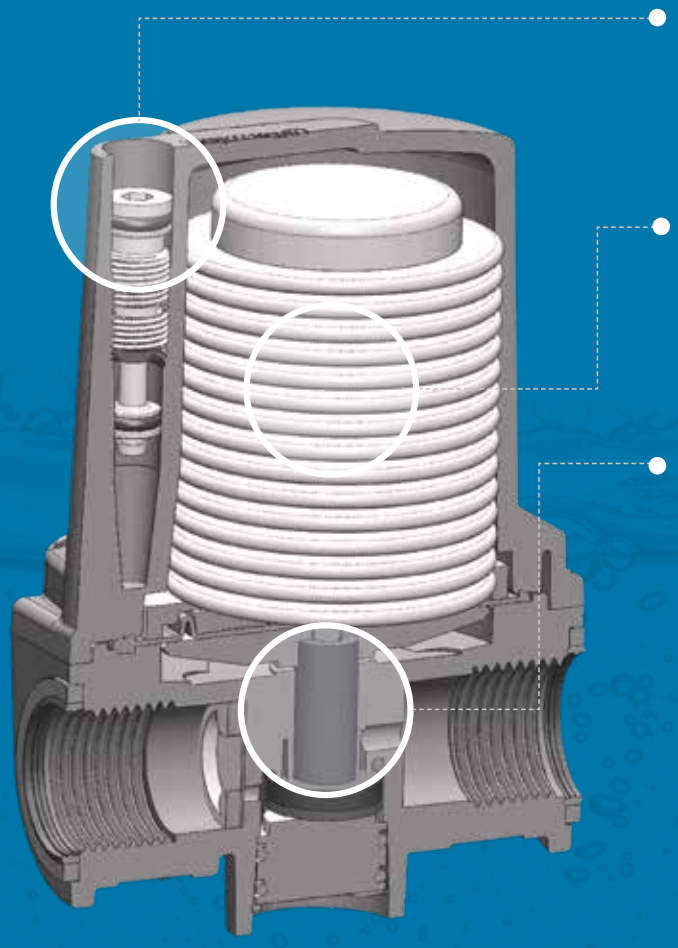

- Adjuster (restrictor) screw which can be set during installation to determine the volume of water discharged into the cistern at each operation by altering the duration of the 'open' period.
- Hydraulic accumulator which, if fully charged, will maintain an equal supply-pressure on both sides of the diaphragm. When pressure on the inlet side is reduced, as other services are used, the pressure imbalance causes the diaphragm operated valve to open.
- Diaphragm operated valve which, when opened, allows water to pass to the urinal cistern.

Hygiene cycle

In buildings where the washrooms are vacant for long periods, a hygiene cycle attachment is available to ensure a regular flush every 12 hours to prevent washroom odours. The bypass screw should be set to permit a slow drip into the cistern to initiate a flush approximately every 12 hours. For correct operation it is essential that the siphon of the auto flushing cistern does not leak.

Specification wording

The installer shall supply and install a urinal flushing device of the 'Cistermiser Hydraulic Valve' type on the supply pipe to the urinal cistern, as shown on the drawing. The flushing control device shall be a mechanical, hydraulic device operated by changes in system pressure due to demand on connected water services within the washroom.

Standard Valve

The flushing control device shall be suitable for supply system pressures of between 0.5 and 6.0 bar (typically either mains water or tank-fed systems above 5m head).

Low Pressure Valve

The flushing control device shall be suitable for supply system pressures of between 0.3 and 0.5 bar (typically tank-fed systems between 3m and 5m head).

Product codes

- Standard Hydraulic Valve: **STD**
- Standard Hydraulic Valve with Hygiene Flush: **STDIF**
- Low Pressure Hydraulic Valve: **LP**
- Low Pressure Hydraulic Valve with Hygiene Flush: **LPIF**

STANDARD HYDRAULIC VALVE

LOW PRESSURE HYDRAULIC VALVE

Choosing the right valve for your application

Two models make up the range of Hydraulic Valves, each suited to a different range of water supply pressure. This table will help to specify the right model for your application. **Note:** The user can control the amount of water allowed to pass through the valve each time it is activated; most users choose a range between 0.5 and 10 litres per flush.

COLOUR CODED PACKAGING	MODEL	SUPPLY	OPERATING SENSITIVITY
	Standard Valve (including option with Hygiene Flush)	Mains water or tank-fed systems above 5m head	15% of supply pressure
	Low Pressure Valve (including option with Hygiene Flush)	Tank-fed systems, 3m to 5m head	20% of supply pressure

The above flushing control device shall be as manufactured by: Cistermiser Limited, Unit 1, Woodley Park Estate, 59 – 69 Reading Road, Woodley, Reading, RG5 3AN Tel: 0118 969 1611

Infrared Control (IRC®) Valve

Cistern-flushing urinal valve with motion-sensing infrared

Reduces water consumption by over 80%

- Normal or Economy mode options.
- Ensures compliance with the Water Regulations.
- Can be concealed to reduce the risk of vandalism.
- Battery or mains powered (no external transformer required). IRC® can use batteries as back-up power to mains supply if required.
- Front access to battery compartment for ease of replacement.
- Pipe, wall or ceiling mounted sensor: surface mounted or recessed.
- Visible LED status indicator and low battery alert.
- On DEFRA's Water Technology List; purchase and installation are tax deductible.

WRAS APPROVED PRODUCT

The Infrared Urinal Flush Control (IRC®) valve automatically manages the supply of water to a urinal cistern. The PIR sensor detects movement and activates the solenoid valve, allowing water into a urinal cistern.

Product information

- The solenoid assembly is plumbed in on the water supply to the urinal cistern. The connection to the infrared sensor is made either by directly mounting the sensor module on to the solenoid or by using the 'floating socket' supplied for a remote mounting. If mounted remotely, the sensor module may be:
  - Surface mounted.
  - Recessed into a suspended ceiling using the cutting template and mounting bracket, supplied with the IRC® as standard.
- If the sensor detects no occupancy in 12 hours it will automatically open the valve for 30 minutes to allow one flush of the cistern to rinse the urinals and pipework.
- The sequence is designed to maximise battery life, giving approximately 3 years' life from one good quality set of batteries.
- The flow rate of the water into the cistern is adjustable to maximise water economy. Generally this should be set so that the cistern flushes once every time the valve is opened. i.e. every 30 minutes during occupation.

How it works

The Infrared Urinal Flush Control (IRC®) consists of a solenoid valve and the sensor module.

When the IRC® detects movement in the washroom, a pulse from the sensor opens the normally-closed solenoid valve and water flows to the cistern. The LED flashes to show the valve is open.

In Normal mode, the IRC® operates with a 30-minute cycle. This means that the cistern will flush a maximum of 2 times per hour.

In Economy mode, an additional delay of 15 minutes is provided before the Normal mode operating cycle is activated, to save even more water. This means that the cistern will flush a maximum of 2 times in 90 minutes.

Installation options

PIR sensor unit: Contained within a white moulded ABS case designed to fit directly on to the solenoid valve assembly for surface mounting. Front access to the battery compartment. Rear access for terminals for a 230V mains power supply to the integral transformer and the 6V DC output to the solenoid.

Dimensions	85 x 85 x 68mm (W x H x D) including the sensor lens.
Range	125Ð infrared detection, spanning 9.2 metres at floor level with a maximum height detection range of 2.5 metres.
Voltage	6V DC nominal 54µA, peak 750mA, for 50ms
Mains supply	Nominal 230V +/- 10% AC 50hz 20mA
Battery supply	6V from 4 x 1.5V alkaline AA (LR6) batteries
Solenoid valve	6V latching valve, UK WRAS approved. One valve per sensor unit.
Water supply	0.1 to 6 bar pressure range. Integral, slow-fill flow regulator. If supply pressure is above 6 bar, fit a pressure reducing valve.

PRESSURE BAR	MAX FLOW LITRES PER MIN
6	3.7
2	2.2
0.1	0.7

Specification wording

- The installer shall supply and install a urinal flushing device of the 'Cistermiser IRC' type on the supply pipe to the urinal cistern, as shown on the drawing.
- The flushing control device shall consist of a PIR sensor with a control unit and a brass-bodied solenoid valve assembly with integral flow regulator.
- The flushing control device should have a hygiene flush function for periods of low use.
- The flushing control device shall be suitable for supply system pressures of between 0.1 and 6.0 bar.
- The flushing control device shall be suitable for connection to either 230V, 50 Hz single phase supply with battery back-up, or powered by 4 x 1.5V alkaline batteries of type LR6.
- The flushing control device shall provide access to batteries without the need to de-mount the sensor.
- The flushing control device shall have provision to be mounted directly on the pipework or remotely using the flush mounting bracket supplied.
- The above flushing device shall be as manufactured by: Cistermiser Limited, Unit 1, Woodley Park Estate, 59-69 Reading Road, Woodley, Reading RG5 3AN Tel: 0118 969 1611

Product code

Infrared Urinal Flush Control Valve: **IRC2**

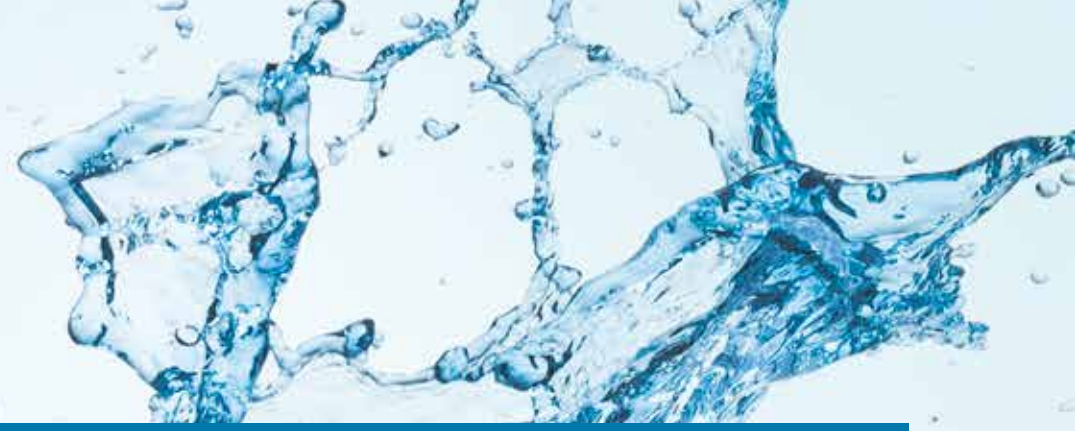

SAVE ON AVERAGE

129,600

LITRES PER YEAR

Reduce water wastage and costs. Urinals often flush regardless of use, wasting a lot of water, especially out of hours. Installing a Cistermiser IRC® valve operating in Normal mode can save on average 129,600 litres of water per year and reduce costs by up to £386 per urinal bowl.

	UNCONTROLLED URINAL	IRC® NORMAL MODE	IRC® ECONOMY MODE
Litres per flush	4.5	4.5	4.5
Flushes per hour	4	2	1.33
Hours per day	24	12	12
Days per year	365	260	260
Water usage per year (ltrs)	157,680	28,080	18,673
Water saving per year (ltrs)	-	129,600	139,007
Water usage per year (m^3)	157.68	28.08	18.67
Water costs per m^3* (£)	2.98	2.98	2.98
Annual water cost (£)	469.89	83.68	55.64
Annual water cost saving (£)	-	386.21	414.25

*Based on a typical UK domestic water cost of £2.98 per m^3 combined supply and sewerage (Feb 2018)

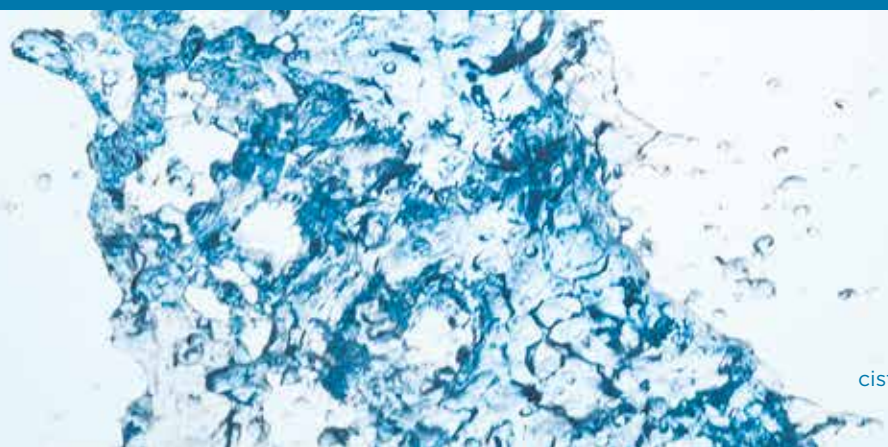

Direct Flush
Mains-flushing urinal valve with infrared activation

The cost effective solution to maximise urinal hygiene and water economy

- Designed for urinals flushing directly from the mains cold water supply.
- No cistern required.
- Only flushes urinal bowl after use.
- Vandal-resistant – valve totally concealed.
- Hygiene flush for periods of non-use.
- Adjustable flush duration and range.
- Discreet and Accessible fitting options.
- Mains and battery powered options included.
- Ensures compliance with Water Regulations.
- BREEAM Wat 01 compatible product.
- On DEFRA's ECA Water Technology List; purchase and installation are tax deductible.

WRAS APPROVED PRODUCT

Direct Flush is an infrared sensor controlled urinal valve. The Direct Flush automatically flushes the individual urinal after use, ensuring the highest level of hygiene from the minimum volume of water. Direct Flush removes the need for the auto-flush cistern and associated plumbing used in traditional urinal installations, which flush all urinals intermittently even if they have not all been used.

Product information

- Direct Flush includes an integral DC pipe interrupter (air gap), enabling the installer to connect it directly to the mains water supply. This provides fluid category 5 back-siphonage protection, without the need for any additional backflow prevention or check valves.
- Direct Flush can be powered by either mains electricity via the DC transformer or batteries; both options are included as standard. When batteries are fitted the Direct Flush provides a low battery warning indicator.
- A mains power supply unit (PSUC) which powers up to 20 Direct Flush urinal valves is also available. Only 1 fused spur is required when using this product.
- Additional customised washroom settings are obtainable via a hand-held remote control Infrared Configuration Unit (ICU) which is available as an optional extra. The remote controller enables rapid automatic range configuration to the specific washroom dimensions, deactivation of the hygiene flush function and, where a siphonic trap has been fitted, activation of the trap refill function.

How it works

The Direct Flush infrared sensor detects the user at the urinal bowl and flushes 2 seconds after the user departs. The LED flashes green every 3 seconds whilst a user is detected. If a user is detected whilst the water is flushing, the flush is automatically arrested to prevent splashing and wastage. During the flush, the LED flashes green once a second.

The flush duration is adjustable which ensures that only the minimum amount of water necessary is used.

If there has been no use of the urinal for 12 hours, the Direct Flush automatically runs a hygiene flush to prevent odours and the build-up of uric acid in the pipework.

Reducing water wastage and costs, ensuring hygiene

Uncontrolled urinals may flush constantly regardless of use, wasting thousands of litres of water per year and costing hundreds of pounds per year.

The Direct Flush is activated after every use of the urinal but flushes as little as 0.5 litre at a time. Cistermiser has calculated savings of 134,000 litres and up to £400 per year where a Direct Flush has been installed.

	UNCONTROLLED URINAL	DIRECT FLUSH 7.5 LITRES PER HOUR	DIRECT FLUSH 10 LITRES PER HOUR
Litres per flush	4.5	0.5	0.5
Flushes per hour	4	15	20
Hours per day	24	12	12
Days per year	365	260	260
Water usage per year (ltrs)	157,680	23,400	31,200
Water saving per year (ltrs)	0	134,280	126,480
Water costs per m³* (£)	2.98	2.98	2.98
Annual water cost (£)	469.89	69.73	92.98
Annual water cost saving (£)	0	400.16	376.91

*Based on a typical UK domestic water cost of £2.98 per m³ combined supply and sewerage (Feb 2018)

Water Efficiency Rating

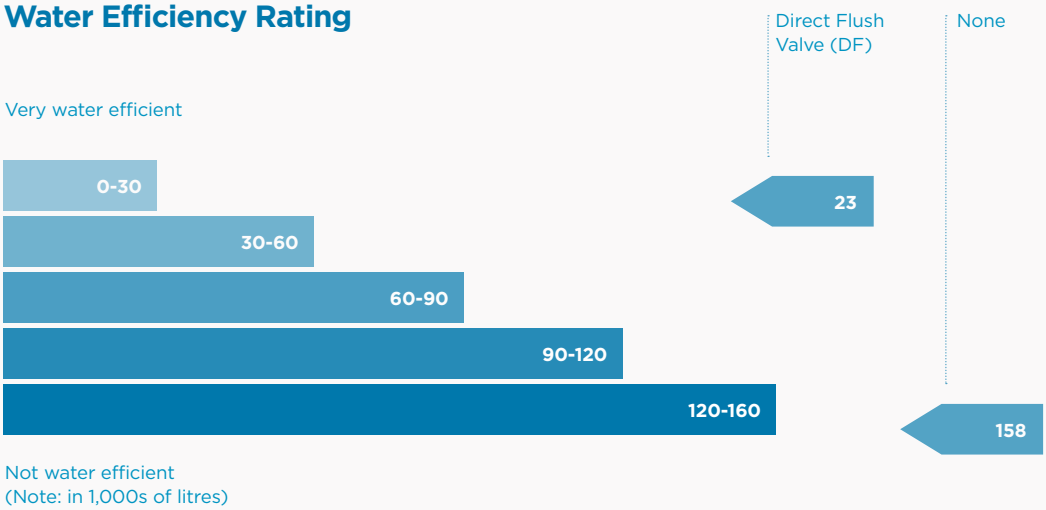

Installation options

Direct Flush Accessible infrared sensor

The Direct Flush Accessible incorporates the valve and the power options as well as the sensor in a single compact box housing. It can be installed on to either a concealed structural wall / frame or on to the exposed wall panel. It is ideal where access cannot be gained to the wall cavity. The sensor plate can be removed to enable servicing of the valve or battery replacement (if battery powered) in the installed position without the need to remove the panel.

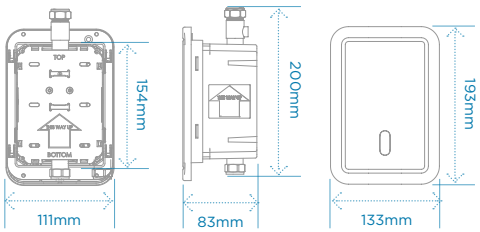

Direct Flush Discreet infrared sensor

The Direct Flush Discreet unit is an alternative installation option where rear access can be gained to the wall cavity for servicing and inspection. The valve is mounted on to the pipework behind the panel or wall together with either the mains supply unit or batteries, while the unobtrusive infrared sensor is installed directly above the urinal bowl.

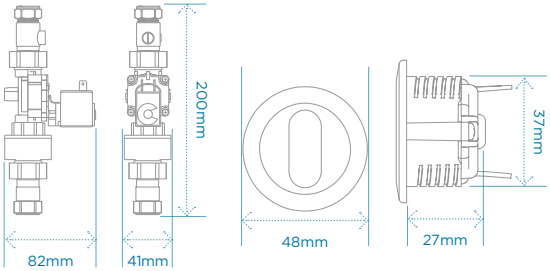

Specification wording

Direct Flush Discreet

The installer shall supply and install a urinal flushing device of the Cistermiser DFD type for concealed installation where service access is provided externally. A Cistermiser DFD is to be fitted to each individual urinal. The flushing control device is to consist of a PIR sensor remotely mounted above the urinal and controlling a solenoid valve with an integral DC pipe interrupter to comply with Water Regulations.

Direct Flush Accessible

The installer shall supply and install a urinal flushing device of the Cistermiser DFA type for installation where service access is not provided. A Cistermiser DFA is to be fitted to each individual urinal.

The flushing control device is to consist of a PIR sensor controlling a solenoid valve with an integral DC pipe interrupter to comply with Water Regulations. The sensor, valve and integral power supply are to be contained within a mounting unit with removable face plate to allow service access once installed. The unit is to be mounted above the urinal so that the removable face plate is flush with the finished wall surface.

Direct Flush Discreet & Direct Flush Accessible

The flushing control device is to be fully configurable for flush time and duration, sensing distance, flush arrest, and is to be programmable either manually or by use of the ICU (remote control) where supplied. The unit should also have a programmable periodic hygiene flush function for periods of low use and a cleaner's function to conserve water during routine cleaning and maintenance.

The flushing control device is to be suitable for connection to either 230V 50Hz AC single phase supply or from 4 x 1.5V alkaline batteries of type LR6. For multiple product installations the device is to have the option of being installed with a common power supply unit (PSUC) capable of powering several units from one 230V fused spur.

The unit should be the Cistermiser Direct Flush as manufactured by: Cistermiser Limited, Unit 1, Woodley Park Estate, 59 – 69 Reading Road, Woodley, Reading, RG5 3AN Tel: 0118 969 1611.

Product codes

- Direct Flush Discreet: **DFD**
- Direct Flush Accessible: **DFA**

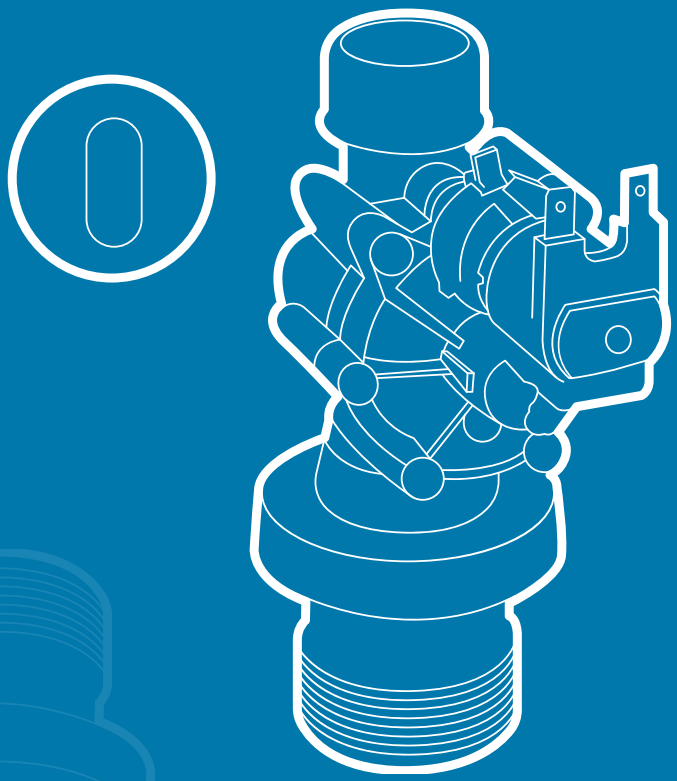

Toilet Flushing

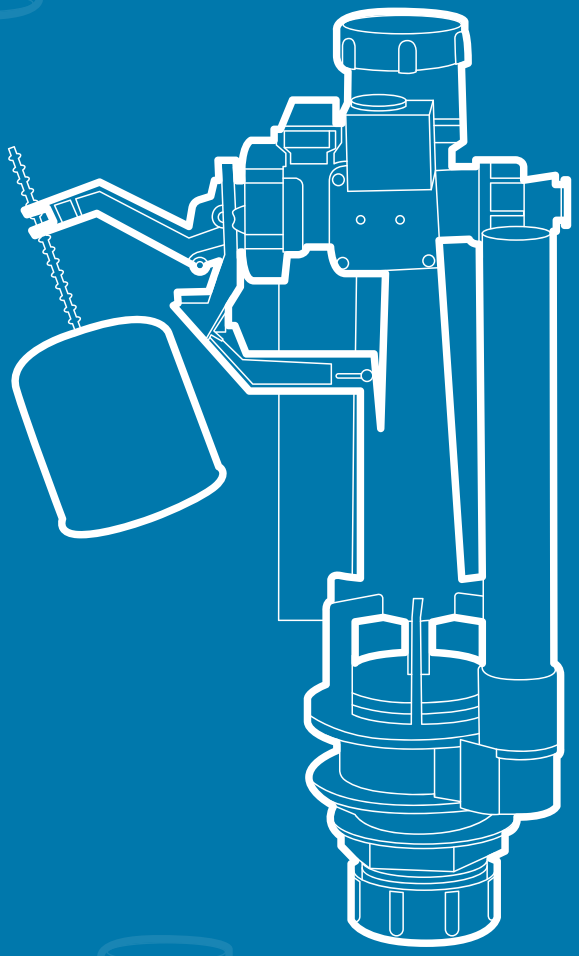

Easyflush
WC cistern flush valve

Hands-free and water-conserving toilet cistern flush and fill valve

- Infrared sensor-operated WC cistern flush valve.
- Defaults to part flush as low as 2 litres for maximum water savings.
- No-touch means hygienic, with no cross-contamination.
- Installer programmable flush volumes – improved water economy.
- Flush (outlet) and delayed action fill (inlet) valves combined in one unit.
- Available in active (Wave) or passive (Walkaway) mode.
- BREEAM Wat 01 compatible product.

The Easyflush no-touch dual flush WC cistern valve promotes best practice in water economy and hygiene in domestic and commercial washrooms. Easyflush is easy to install in retrofits or new installations and is suitable for concealed and exposed cisterns. It can also be supplied with its own cistern.

Product information

- Both the Wave and Walkaway sensors meet the DDA requirements and are Part M compliant.
- Easyflush is two interlinked valves in one: a lift/drop valve which empties the cistern and a delayed action float valve which controls refilling.
- It also includes an integral overflow pipe to prevent flooding.
- The compact single-piece unit is located over the outlet by a bayonet-type locking device which simplifies installation.

Intelligent memory feature

If the user requires an additional flush they can bring their hand close to the infrared sensor to activate an automatic further flush once the cistern has finished refilling.

How it works

Easyflush Wave is operated by the user bringing their hand close to an infrared sensor. The dual flush mode enables the user to select either a part or full flush by the length of time their hand is in front of the sensor.

For a part flush the hand is held in front of the sensor for up to one second and, for a full flush, over one second.

Easyflush Walkaway is normally activated by the user standing up or leaving the cubicle; however, it can also be activated by the user bringing their hand toward the sensor.

The Walkaway version comes with the dual flush factory programmed. A part flush will be delivered if the user departs from the cubicle within 40 seconds and a full flush will be delivered if the user departs after 40 seconds.

Reducing water wastage through delayed action

UK toilets needlessly flush away 1.2 billion litres of water a day (Waterwise).
The graph below (adapted from WRc data) shows that the actual flush volume for a nominal 6 litre WC increases as pressure increases. The Cistermiser Easyflush will maintain the nominal volume at all pressures due to its patented delayed action operation.

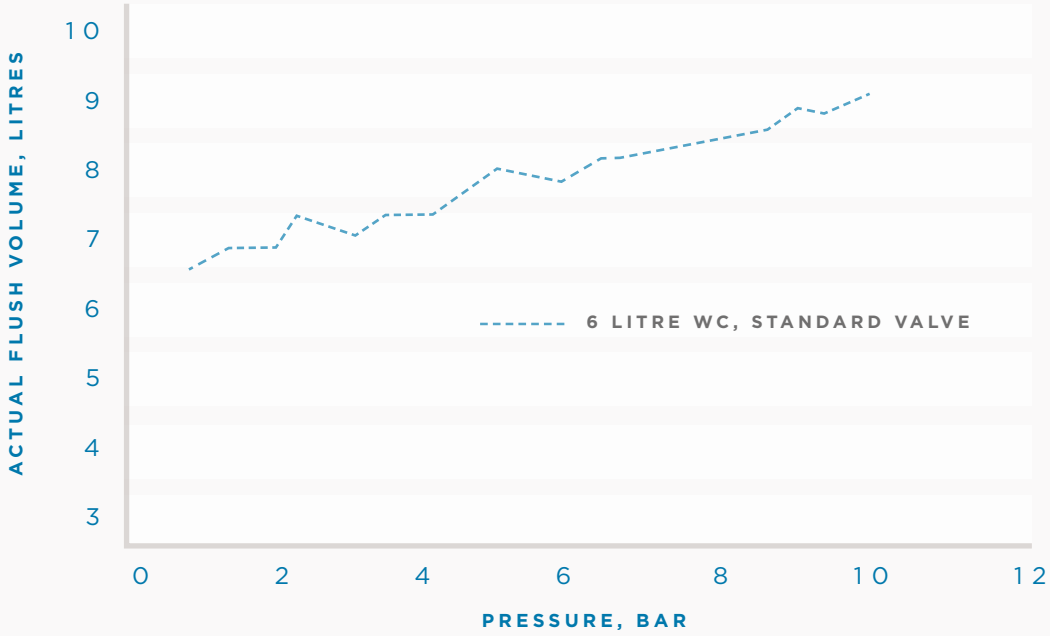

Installing a Cistermiser Easyflush can save up to 84,000 litres per year as shown below:

	TRADITIONAL WC (INSTALLED BEFORE 1991)	STANDARD WC (WATER REGULATIONS)	EASYFLUSH
Litres per flush	9	6	2.8
Flushes per hour	5	5	5
Hours per day	20	20	20
Days per year	260	260	260
Water usage per year (ltrs)	234,000	156,000	72,000
Water saving per year (ltrs)	-	-	84,000
Water usage per year (m^3)	234	156	72
Water costs per m^3 (£)	2.98	2.98	2.98
Annual water cost (£)	697.32	464.88	214.56
Annual water cost saving (£)	-	-	250.32

*Based on a typical UK domestic water cost of £2.98 per m^3 combined supply and sewerage (Feb 2018)

Delayed action valve operating sequence

The inlet float valve operates with a delayed action, which only allows the cistern to begin refilling after it has been completely emptied and the outlet valve has closed. This patented feature prevents an increase in the volume of water per flush. In other systems water can enter the cistern before the outlet valve has closed, thus increasing the volume of water per flush.

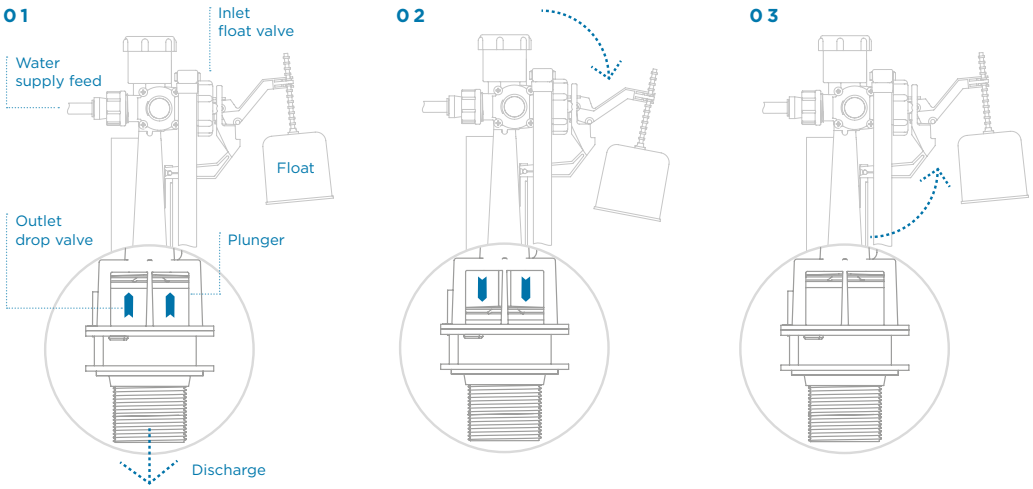

FLUSH TRIGGERED

Water pressure lifts plunger, opening outlet drop valve and holding inlet float valve in the closed position.

FLUSH FINISHES

Outlet drop valve closes, lowering inlet float valve and cistern begins filling.

STANDBY MODE

Once cistern is full, water holds the inlet float valve closed.

Installation options

- Easyflush is powered by 4 x 1.5V AA (LR6) batteries or a 6V DC mains adaptor which can be installed behind service panels.
- The battery option allows the Easyflush to be installed inside exposed cisterns.
- Also available as an optional extra is a multi-product mains power supply unit (PSUC) to power up to 20 sensors from a single fused spur.
- The Easyflush Wave can be fitted into a concealed or an exposed cistern and can also be easily retrofitted.
- The Easyflush Walkaway is only suited to concealed installations.

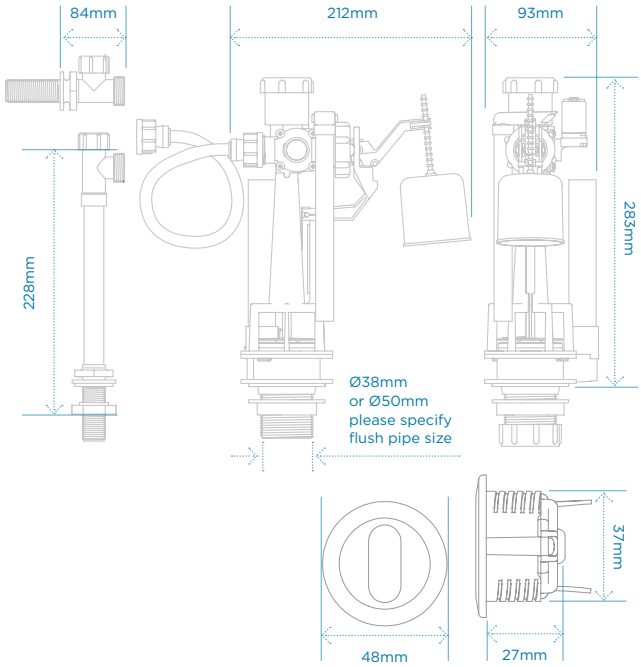

Cistern maximum overall dimensions

(All dimensions with lid fitted) height: 335mm, width: 510mm, depth 150mm outlet options: 38mm (1.5”) or 50mm (2”) flush.

- Suitable for the majority of 6 litre WCs.
- Available with either 38mm (1.5”) or 50mm (2”) diameter flush pipes.
- Side entry water inlet supplied as standard but bottom entry also available.
- Internal overflow included.

EASYFLUSH WAVE =

EASYFLUSH WALKAWAY =

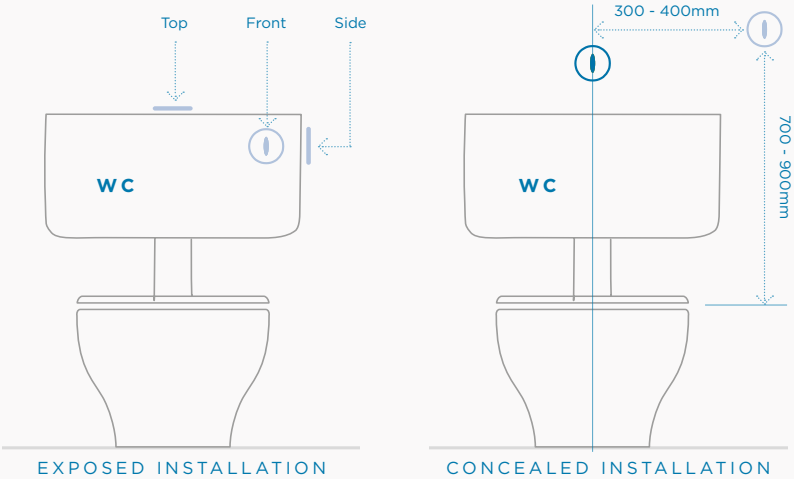

Specification wording

Easyflush WC Cistern Flush Valve
The installer shall supply and install a no-touch dual flush, sensor operated flush and fill delayed action valve to each WC cistern.

The valve shall consist of a single remote sensor, solenoid-operated flush valve and combined integral fill valve. The inlet will include a double check valve. The unit will be of a dual flush capability from one sensor and the flush volume will be adjustable both for part and full flush functions. The sensor will be programmable for operating range, part flush time, cistern refill time and part flush operation (default is for part flush to be active). The unit should also incorporate a cleaner’s function to minimise water usage during routine cleaning operations. The programming can be carried out manually by hand or by means of the optional ICU (remote control). The flush valve and inlet valve are to be linked (delayed action between inlet and outlet) to ensure that no water can enter the cistern during the flush cycle to prevent excess water usage. Compliance with BREEAM Wat 01.

The unit should have a periodic hygiene flush function to ensure facilities are kept in a clean and hygienic condition.

The flush and fill valve is to be suitable for connection to either 230V 50Hz AC single phase supply or from 4 x 1.5V alkaline batteries of type LR6. For multiple product installations the device is to have the option of being installed with a common power supply unit (PSUC) capable of powering multiple units from one 230V fused spur. The unit is to be suitable for mounting in a variety of cisterns and is to be easily installed and removed for maintenance purposes via a bayonet locking device.

The WC cistern flushing valves should be the Easyflush Wave or Walkaway no-touch dual flush WC valve as manufactured by: Cistermiser Limited, Unit 1, Woodley Park Estate, 59 – 69 Reading Road, Woodley, Reading, RG5 3AN Tel: 0118 969 1611.

Product codes
- Easyflush Wave: **EF**
- Easyflush Walkaway: **EF/WALK**
- Easyflush concealed cistern: **CISTERN**

Easyflush Direct

Infrared sensor activated mains flushing for WCs

WRAS APPROVED PRODUCT

Infrared sensor activated mains flushing for WCs

Easyflush Direct is an electronic flushing system for WCs that removes the need for a WC cistern, by taking its water feed straight from the mains supply.

This means there is no cistern to be refilled and a second flush can be activated without a delay. A hygiene flush can also be activated to maintain the cleanliness of the WC.

- No cistern required – saves space.
- No inlet valves – reduced installation cost.
- No cistern refill – immediate re-flush for busy areas.
- Infrared sensor operated.
- Hygiene flush to maintain cleanliness.
- Range of flow rates.
- Compliant with Water Regulations. WRAS approved.
- BREEAM Wat 01 compatible product.

Effective flushing

To achieve an effective and efficient flush, the water system needs to deliver at least 90 lpm (litres per minute). Typically this would require that the dynamic water pressure, measured before the valve, is at least 2 bar. If 90 lpm cannot be achieved, the flush will be less effective and a longer flush duration or multiple flushes may be required. This can result in water wastage.

If the water flow rate exceeds 150 lpm, splashing from the WC bowl may occur. Easyflush Direct is fitted with a flow regulator that will limit the flow rate to 100 lpm. However, additional flow regulators for 90 lpm and 125 lpm are included, to regulate the flow rate further, if required.

These flow regulators are coloured coded:

- Dark blue: 90 lpm
- Black: 100 lpm (fitted as standard)
- White: 125 lpm

Note: Some WC bowls are designed for low volume flushing and an effective flush can be achieved at low flow rates. Please check with the WC bowl manufacturer. The flow regulator can be removed to maximise flush performance but this can lead to excessive water use.

Product information

Easyflush Direct includes a valve, DC pipe interrupter and sensor. When the sensor is activated, the valve is activated for between 2 and 3.5 seconds, supplying water to flush the WC direct from the mains water supply. After this period the valve closes and the flush is complete, but can be activated again immediately.

There are two versions to suit different applications:

- **Easyflush Direct Wave** is operated by the user bringing their hand towards the infrared sensor. A part flush is triggered by holding one's hand in place near the sensor for about 1 second and a full flush is triggered by a slightly longer hand pass.
- **Easyflush Direct Walkaway** is activated when the user stands up or leaves the cubicle, but it can also be activated by the user bringing their hand toward the sensor. A part flush is triggered by short user occupancy and a full flush by long user occupancy (over 45 seconds).

Flow rates

The flush volume is determined by the flush duration and the flow rate of the water supply. Using the flow regulators and adjusting the flush duration, will allow you to configure the flush performance. However, this will differ based on the WC bowl design.

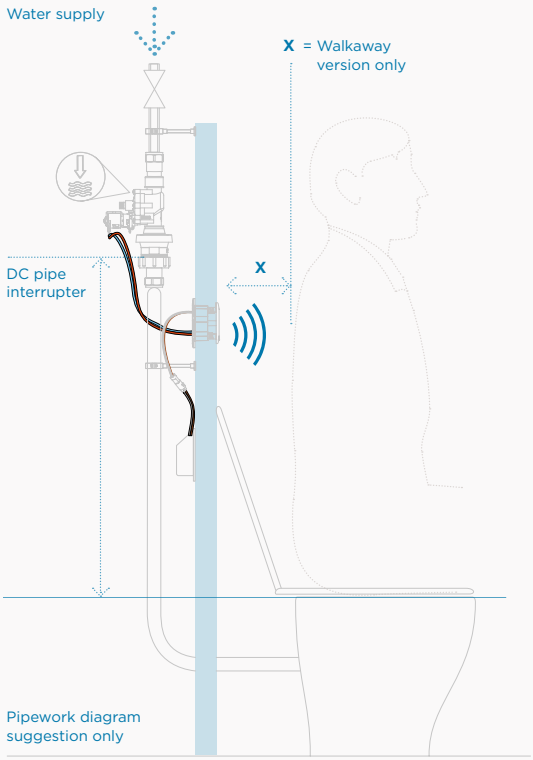

The flow rate can also be reduced by turning the adjuster screw in the middle of the valve (clockwise to reduce flow) or by fitting a third party pressure reducing valve above Easyflush Direct.

Ensure that the dynamic water pressure (pressure measured while the valve is open and water is flowing) is sufficient to achieve the required flow rate.

The graph below shows the approximate flow rates at a range of dynamic pressures:

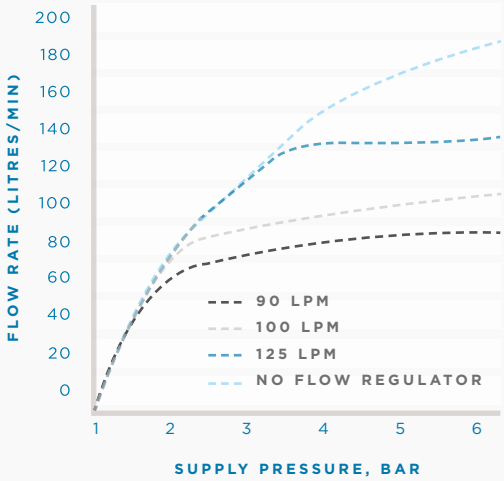

Easyflush Direct requires a minimum flow rate of 90 litres per minute (typically 22m pipework) and is therefore not generally suitable for domestic installations.

DC pipe interrupter

Easyflush Direct introduces an air gap into the water system. Care must be taken that pipework design and WC bowl selection is appropriate to ensure sufficient flow to flush the WC while preventing water flowing out of the air gap. This can occur when back pressure is high, caused by a restrictive connection to the WC.

The valve should always be installed as high as possible on the vertical pipe feeding the WC bowl flush inlet to prevent water backing up and leaking from the DC pipe interrupter.

When installing the valve it is good practice to ensure there is an accessible isolation valve upstream of the valve. Ensure flow rate at valve does not exceed the flow rate to the WC bowl, to prevent water backing-up to the DC pipe interrupter.

Easyflush Direct is supplied with a DC pipe interrupter and a 1.5” flush pipe fitting.

Installation options

- Easyflush Direct is powered by a 6V DC mains adaptor which can be installed behind service panels.
- Also available as an optional extra is a multi-product mains power supply unit (PSUC) to power up to 20 sensors from a single fused spur.

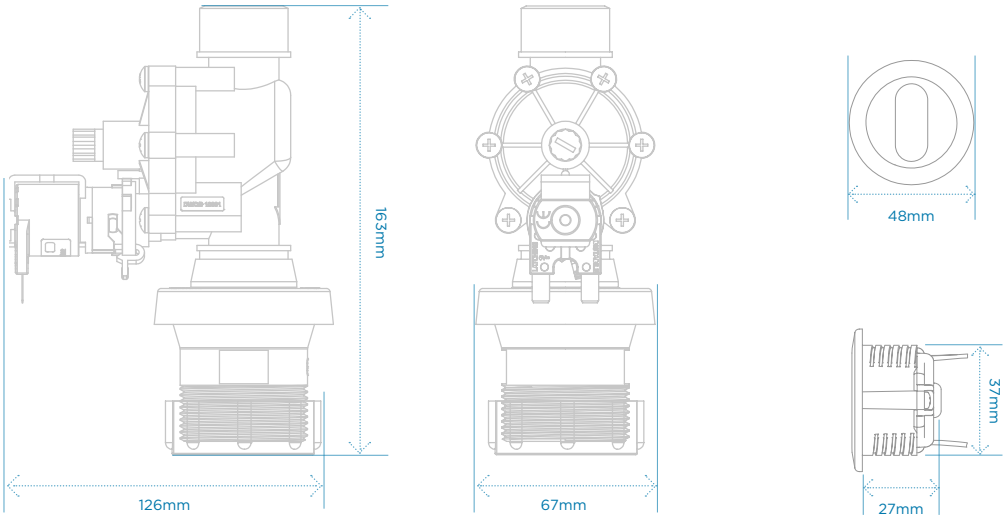

Specification wording

Easyflush Direct Flush Valve
The installer shall supply and install a no-touch dual flush, sensor operated flush.

The unit will be of a dual flush capability from one sensor and the flush volume will be adjustable both for part and full flush functions.

The sensor will be programmable for operating range, part flush and full flush operation (default is for part flush to be active).

The unit should also incorporate a cleaner's function to minimise water usage during routine cleaning operations.

The programming can be carried out manually by hand or by means of the Infrared Control Unit (not supplied).

The unit shall operate without the need for a WC cistern.

The unit should have a periodic hygiene flush function to ensure facilities are kept in a clean and hygienic condition.

For multiple product installations the device is to have the option of being installed with a common power supply unit (PSUC) capable of powering several units from one 230V fused spur.

The WC flushing valves should be the Easyflush Direct Wave or Walkaway no touch mains flushing WC valve as manufactured by:
Cistermiser Limited, Unit 1, Woodley Park Estate, 59 – 69 Reading Road, Woodley, Reading, RG5 3AN Tel: 0118 969 1611.

Product codes
- Easyflush Direct Wave: **EFD**
- Easyflush Direct Walkaway: **EFD/WALK**

Infrared Taps

Novatap and Vectatap
Infrared Taps

The Novatap and Vectatap are elegant deck-mounted chrome basin outlets, with the benefit of hygienic hands-free operation. The Novatap features a valve integral in its body making it extremely simple to install. The Water Regulations require that the flow rate of a tap does not exceed 3.6 litres per minute where basins have no plug. The 3.5 litres per minute model therefore ensures that this tap is compliant in such applications.

WRAS APPROVED PRODUCT

Save water, promote hygiene and reduce maintenance costs

- Hands-free infrared basin outlets.
- Automatic shut-off: no drips or taps left running.
- Improve water and energy efficiency.
- Easy to use: ideal for less-abled or elderly.
- Hygienic: reduce risk of cross-contamination.
- Available in 5 litres per minute and 3.5 litres per minute models.
- Mains and battery powered options included.
- Vandal resistant.
- Easy to fit in new installations or retrofits.

How it works

The flow of water from the taps is turned on when the user presents their hands to the infrared sensor which is located on the lower body of the Novatap and Vectatap. No contact is required. When the user's hands are moved away the flow of water stops after a 2 second delay.

Product information

- Robust design and build quality make the taps ideal for hard use environments where the less-abled or elderly may find it difficult to operate conventional taps.
- The taps are particularly useful where hygiene issues coupled with water and energy efficiency are paramount.
- Both the water flow run-on time and the sensor range between the tap and the user's hands are fully adjustable.
- The taps automatically switch off after 60 seconds of continuous flow, preventing any water wastage if there is attempted vandalism.
- To prevent the potential build-up of stagnant water, which can create legionella bacteria growth, the tap incorporates a hygiene rinse option which operates 12 hours after the last use of the tap.

Installations

- The units can be powered by either mains or batteries, with both options included as standard.
- Also available is a multi product power supply unit (PSUC) which provides power for up to 20 taps (only 1 fused spur required).
- Additional customised settings are obtainable via a hand-held remote control Infrared Configuration Unit (ICU), which is available as an optional extra. The remote controller enables rapid automatic configuration to the specific washroom dimensions and deactivation of the hygiene rinse function.

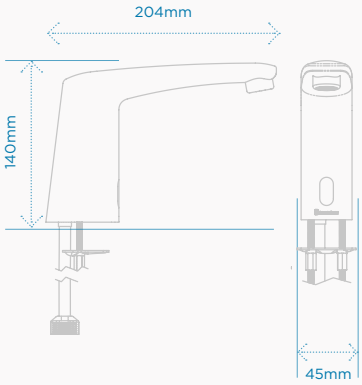

NOVATAP

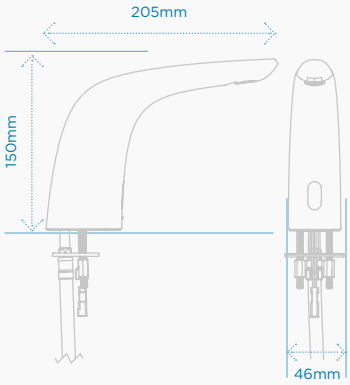

VECTATAP

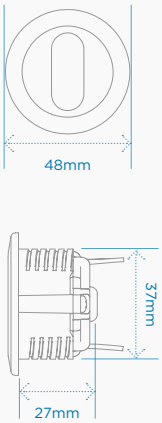

Reducing water wastage

On average, basin taps deliver 8 litres of water per minute (BMA). Installing Cistermiser 3.5 litre per minute taps can save up to 6 litres per use, saving over 80% during a 12 month period.

Tap option	Wet hands (5 secs)	Soap hands (10 secs)	Rinse (20 secs)	Total seconds	Total litres	Example consumption per year	Water savings per year
Conventional one handed lever mixer				35	7.58	415,005	-
Self-closing non-concussive tap 7ltr/min				30	3.75	205,313	50.5%
Novatap 5 ltr/min flow				25	2.08	113,880	72.6%
Novatap 3.5 ltr/min flow				25	1.46	79,844	80.8%

Technical information

3.5 litres per minute

The Water Regulations require that the flow rate of a tap does not exceed 3.6 litres per minute where basins have no plug. The Cistermiser taps, with a 3.5 litres per minute limit ensure compliance in such applications. This model of flow restrictor is non-aerated and thus suitable for high risk applications such as medical facilities and care homes where the risk to users of legionella and other water-carried respiratory contracted viruses/bacteria is high.

Aerators / nozzles

Cistermiser Novatap and Vectatap infrared taps are supplied with interchangeable nozzle / aerators to allow the outlets to be configured to either a 3.5 or 5 litres per minute flow rate.

5 litres per minute utilises a high-tech Neoperl® Caché® Perlator® Honeycomb aerator.

- Unique single piece outlet design inhibits limescale build-up.
- Integral anti-clogging dome screen filters sediment & particles.
- Patented design provides well-aerated, soft to touch splash-free stream.
- Pressure compensating flow limited to 5 litres per minute.

3.5 litres per minute is achieved with a Neoperl® Caché® Perlator® Honeycomb laminar nozzle.

- Spray aerators are particularly suitable for low flow conditions and reducing water consumption in public areas.
- Non-aerated non-splashing laminar stream.
- Pressure compensating flow limited to 3.5 litres per minute.

Specification wording

Novatap and Vectatap

The installer shall supply and install hands-free, infrared activated deck-mounted (Novatap, Vectatap) to all wash hand basin outlets. The units shall be for single water supply; either cold or temperature controlled hot water and will incorporate a pressure compensated flow regulator.

The unit will be programmable for sensing range and run-on duration. The unit will also have a periodic hygiene rinse function to minimize bacterial infection such as legionella and have a cleaner's function for routine janitorial servicing.

The touch-free basin tap is to be suitable for connection to either 230V 50Hz AC single phase supply or from 4 x 1.5V alkaline batteries of type LR6.

For multiple product installations the device is to have the option of being installed with a common power supply unit (PSUC) capable of powering several units from one 230V fused spur.

Product codes

• Novatap (5 or 3.5 l/min): **NT**
• Vectatap (5 or 3.5 l/min): **VT**

NOVATAP

VECTATAP

Washroom Control

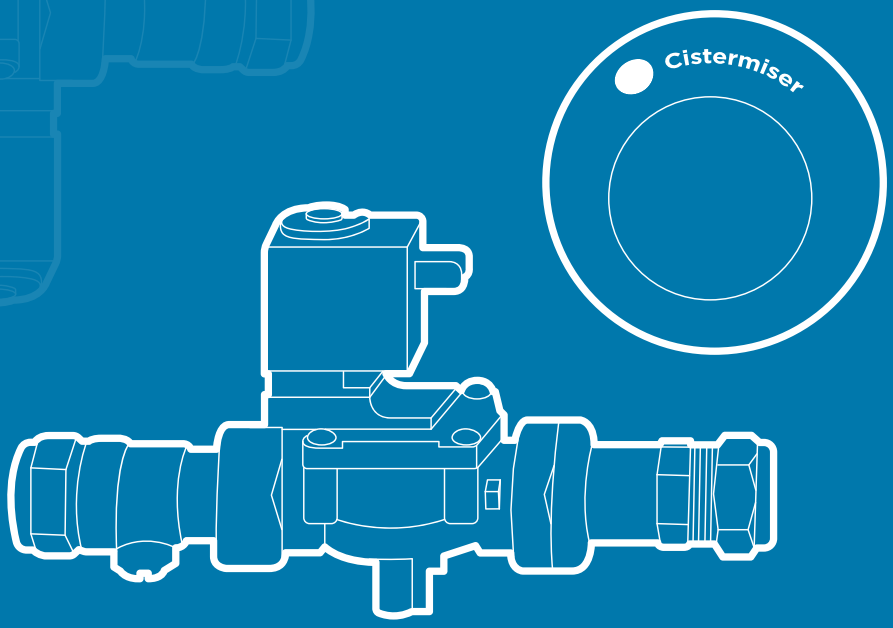

Sensazone
Electronic management system for washrooms

Prevent water wastage, eliminate the risk of flooding in vacant periods and reduce utility bills

- BREEAM compatible; credits under Hea 06, Hea 07, Ene 04 and Wat 03.
- Infrared sensor(s) controls supply of all water and electrical services: hot water, cold water, grey/rainwater, lighting, ventilation.
- Hygiene flush feature.
- Avoid flooding due to vandalism or water wastage due to defective outlets.
- Ambient light sensor feature – lights only turned on when natural light levels require it.
- Surface mounted; suitable for any ceiling type.
- Ensures compliance with Water Regulations and earn BREEAM credits.
- Can be used to control both water and electrics, or water only (taps, WCs and urinals) or electrics only (e.g. lights, fans).

WRAS APPROVED PRODUCT

Product information

- When Sensazone detects a user entering the washroom it activates up to three (for hot, cold and rain/grey water supplies) solenoid valves to allow water to flow freely into the washroom.
- If no motion has been detected for a user-configurable time of either 15 or 30 minutes, the valve will close the water supply to the area until further movement is detected.
- Sensazone is designed to control up to three 2W 2/2 bi-stable (latching) solenoid valves per washroom area.

Save water

Sensazone controls water flow with solenoid valves. If motion is detected the valves open to supply water to urinals and cisterns. If no movement is detected for a pre-set period (configurable to 15 or 30 minutes), water supply is cut off.

As Sensazone controls water at its entry point, the water is prevented from passing uncontrolled through any defective or damaged outlet, eliminating the risk of wastage or flooding during vacant periods.

Reduce energy

Sensazone's automatic shut-down facility eliminates unnecessary energy use. This efficiency is achieved through reducing lighting and extractor fan usage.

The power supply to the lighting will activate when Sensazone detects that the washroom is occupied and when ambient light falls below a level configurable by the user. Power will continue to be supplied for either a 0, 15 or 30 minute period, depending on preference.

Extractor fan operation can also be configured; users have the option of using Sensazone to control the fan run-on time, or using the fan unit's own timer facility (dependent on model selected).

A remote-control handset is available that makes setting the Sensazone system quick and easy.

Eliminates the costs and waste associated with defective washroom outlets or vandalism.

If a washroom outlet is defective or tampered with, water from the mains or central supply can pass uncontrolled through the outlet valves such as taps or WCs. This waste of water can often pass undetected and cause considerable costs (see table).

As the Sensazone controls the flow of water into the washroom area at the entry point, the water is prevented from passing uncontrolled through the damaged outlet, which eliminates the risk of water wastage or flooding during vacant periods.

The calculations below are based on a defective WC cistern valve which is allowing water to pass through a WC at different rates during periods of non-use. Cistermiser has quantified these varying rates and calculated the potential water and financial losses:

Water loss	Drip	Dribble	Stream	Fully Open
Pressure (Bar)	2	2	2	2
Litres per week	889	1,512	8,643	84,672
Litres per year	46,228	78,624	449,436	4,402,994
Cost per week (£)*	2.65	4.50	25.76	252.32
Cost per year (£)*	138	234	1,340	13,120

*Based on a typical UK domestic water cost of £2.98 per m^3 combined supply and sewerage (Feb 2018)

Systems configuration

The Sensazone system features can be used in the following scenarios:

SCENARIO	REQUIRED CONTROL	REQUIRED PRODUCTS
1	To control the water supply to one zone, room or area of a washroom (with a single/ common entrance).	• Sensazone core product
2	To control the water supply and lights and fans to one zone, room or area of a washroom (with a single/ common entrance).	• Sensazone core product • A Sensazone Interface Module • A Sensazone Light & Fan Control
3	To control the water supply to multiple areas of a washroom simultaneously. Examples include a washroom divided into different areas and a washroom with two or more entrances.	• Sensazone core product • A Sensazone Interface Module • Additional Sensor Kits • Additional Valve Kits (where applicable, to a maximum of 3 valves per system)
4	To control the water supply, lights and fans to multiple areas of a washroom (with two or more entrances).	• Sensazone core product • A Sensazone Interface Module • A Sensazone Light & Fan Control • Additional Sensor Kits • Additional Valve Kits (where applicable, to a maximum of 3 valves per system)

Guidance on system layout

The following layouts provide examples of where to locate sensor(s). Sensor(s) should be located at a minimum distance of 1 metre from the entrance(s) to the washroom area.

- The sensitivity of the sensor(s) can be increased to ensure that all users of the washroom area are detected. This feature is particularly applicable in an environment such as a primary school where the presence of the users such as young children, may be more difficult to detect with the normal sensitivity setting. In most applications the default setting offers effective detection.
- Sensazone can be configured either manually or via the hand held remote control Infrared Configuration Unit (ICU) which is available separately.

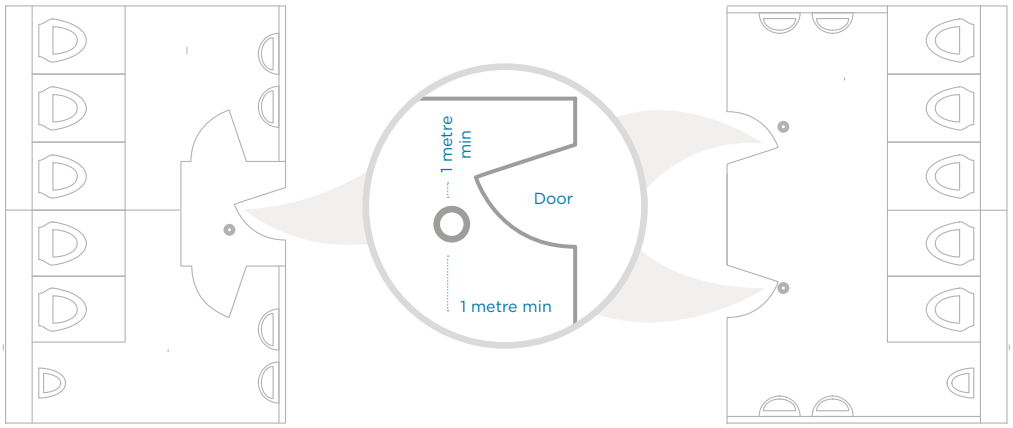

Specification wording

Hea 06
Where evidence provided demonstrates that lighting in all occupied areas is zoned to allow separate control.

The Sensazone system is to provide control to the lighting, specifically in the washroom area, to ensure that lighting is only on when the area is occupied and is automatically switched on for the convenience of users.

Hea 07
Where lighting controls allow commonly required lighting settings to be made quickly and easily by building occupants. Users not familiar with the facility are also catered for by means of the PIR sensor lighting which is automatically switched on when a user is detected.

Ene 04
Where energy efficient external luminaires are fitted and all light fittings are controlled for the presence of daylight.

The Sensazone system is to provide control of the lighting within the washroom area so that the lighting is only on during periods when the washroom is occupied and there is insufficient daylight.

Wat 03
Where evidence is provided to demonstrate that proximity detection shut-off is provided to the water supply to all urinals and WCs.

The unit is to consist of an interface module, a light and fan control (where applicable).

The unit should be the Cistermiser Sensazone as manufactured by: Cistermiser Limited, Unit 1, Woodley Park Estate, 59 – 69 Reading Road, Woodley, Reading, RG5 3AN Tel: 0118 969 1611.

Limescale Prevention

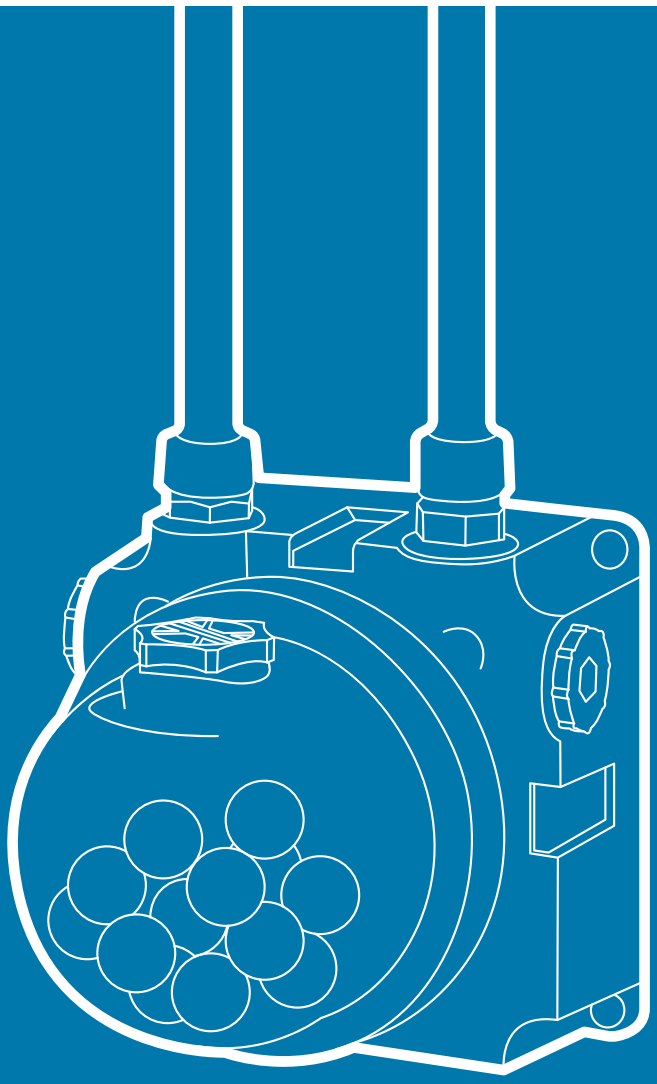

Combimate

Guaranteed prevention of limescale and soft water corrosion water control with no moving parts

How it works

Combimate is filled with the appropriate amount of Combiphos which, when in contact with water, is released in very small quantities, sufficient to keep the mineral ions in suspension.

This action prevents the formation of scale while retaining the health benefits of the natural minerals contained in hard water. Combiphos coats the inside of the pipework, boiler heat exchanger and appliances with a non-residual, microscopic, protective coating to prevent scale-causing minerals from accumulating and aggressive soft water from corroding the system and appliances.

WRAS APPROVED PRODUCT

Health and safety

Combiphos is tasteless and odourless and contains a polyphosphate compound which is classified by the WHO as a 'food-grade' additive. The quantity, size and hardness of the spheres control the amount of Combiphos released. Typically this is less than 3ppm (parts per million) of phosphate in treated water and perfectly safe for human consumption.

Tried and tested

Combiphos is a polyphosphate compound specifically developed to provide the most effective limescale prevention in flow-through installations. Polyphosphate dosing has been safely used to treat water throughout the world for many years.

The Combimate de-scaling guarantee

If Combimate is installed with a new boiler and the Combiphos is replaced annually, Cistermiser guarantees that the new boiler, new heat store or new heat exchanger will not scale up.

Cistermiser is so confident in the capabilities of Combimate, when used with Combiphos, that if the unit it is protecting experiences significant scaling, we will contribute up to £500 towards the cost of repair or replacement.*

*Subject to Cistermiser's warranty policy
Note: Combiphos does not soften water and its effectiveness may be reduced in water heated to temperatures above 60 degrees, in water with carbonate hardness levels above 360ppm or at pH levels below 6.5.

Combimate is a user-friendly domestic limescale prevention device that uses Combiphos

Combiphos, a polyphosphate compound, is 100% food grade material approved by the FAO/WHO and compliant with the European normative standard BS EN 1208, that prevents scale build-up and soft water corrosion in combination boilers and other domestic hot water appliances.

A protective outer cover is fitted to complete Combimate installation.

Combiphos should be replaced on an annual basis. Combiphos Refill boxes (800g) are available from trade outlets.

- Prevents limescale in hard water and soft water corrosion.
- Required where cce is greater than 200ppm in compliance with Part L of the Building Regulations.
- Keeps pipework clear and energy costs down.
- Prevents 'brown' water, protects pipework and keeps maintenance costs down.
- Compact, flexible and quick to install on vertical and horizontal pipework with top or bottom entry.
- For single appliances or 'whole house' water supply.
- Safe for drinking water and all domestic appliances.
- 100% food grade material; FAO/WHO approved and compliant with BS EN 1208.
- No maintenance.
- Easy annual Combiphos top-up.
- WRAS approved.

Installing Combimate

There are two possible installations; whole-house supply or single appliance.

Whole-house supply

For this installation Combimate should be plumbed in after the stop-valve on the cold water supply to the premises. The white removable divider tray should be removed from inside the Combimate dome in a whole house installation so that the dome can be completely filled with Combiphos.

Single appliance installations

Combimate can be used to protect a single appliance by placing it on the cold water supply to that appliance e.g. a boiler in which case the red removable divider tray should be left in place, and Combiphos should only be put in the top half of the dome and this reduces the amount of Combiphos required.

Inlet and outlet connections use 15mm or 22mm compression fittings (depending on model). There is minimal pressure or flow rate loss through Combimate. Vertical, top and bottom entry pipework can be used which ensures easy retrofit installation. Combimate should be installed at least 0·5m from any local sources of heat such as boilers or hot water pipes.

The Combimate can be installed in various configurations allowing maximum flexibility of pipework configurations.

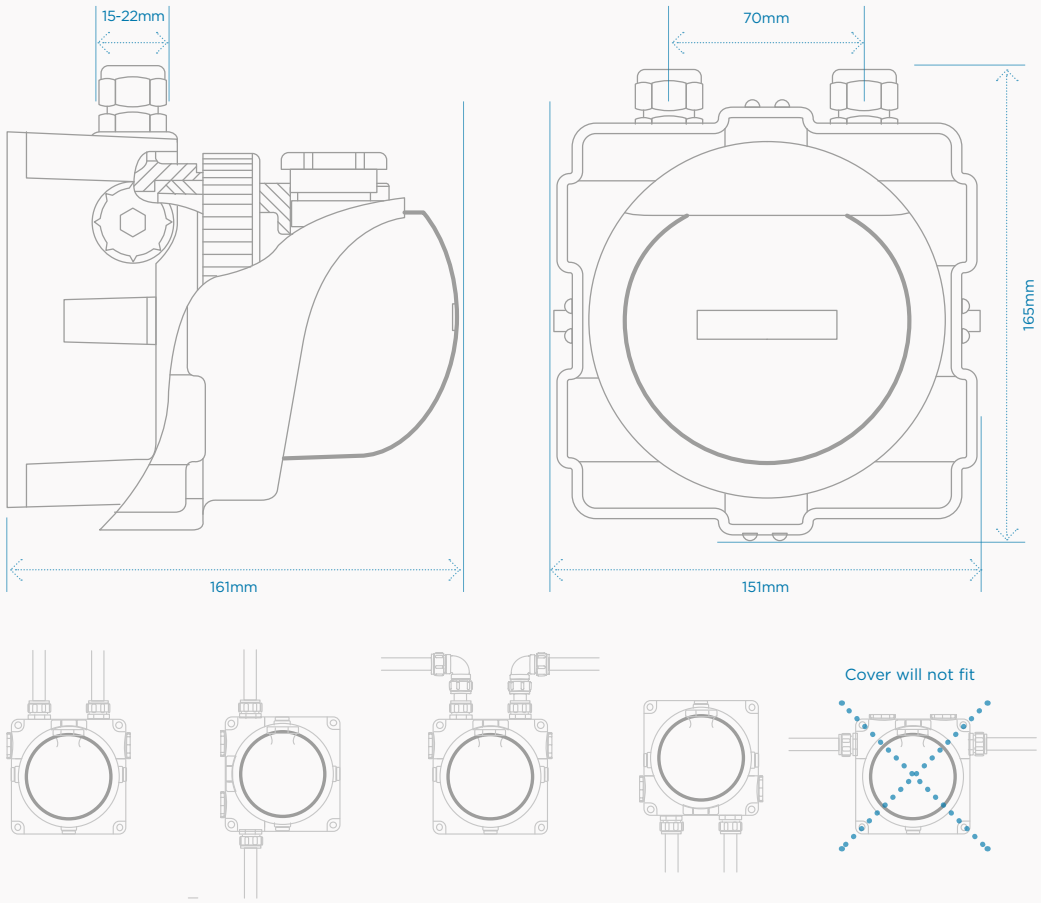

Product codes

- Combimate (15mm fitting): **COM1**
- Combimate (22mm fitting): **COM2**

FACT

1.6mm or 1/16'' of scale in a heating system causes a 12% loss in heating efficiency.

"If you live in a hard water area, doing nothing to counter the problems that limescale causes is probably the most expensive option."

BRITISH WATER
expertise worldwide

Rate of water hardness in mg/l of calcium carbonate in England & Wales

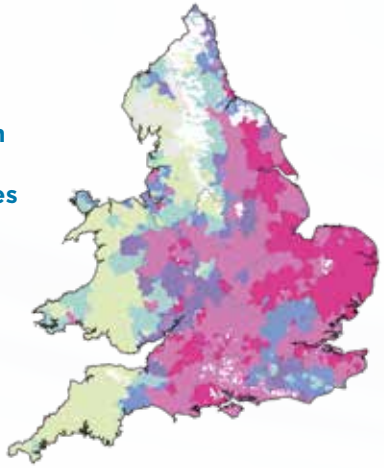

KEY

- No information
- Soft: 0-50
- Moderately Soft: 51-100
- Slightly Hard: 101-150
- Moderately Hard: 151-200
- Hard: 201-300
- Very Hard: Over 300
- No public supply

© Crown copyright
All rights reserved Defra 100018880 2009

Remote Monitoring

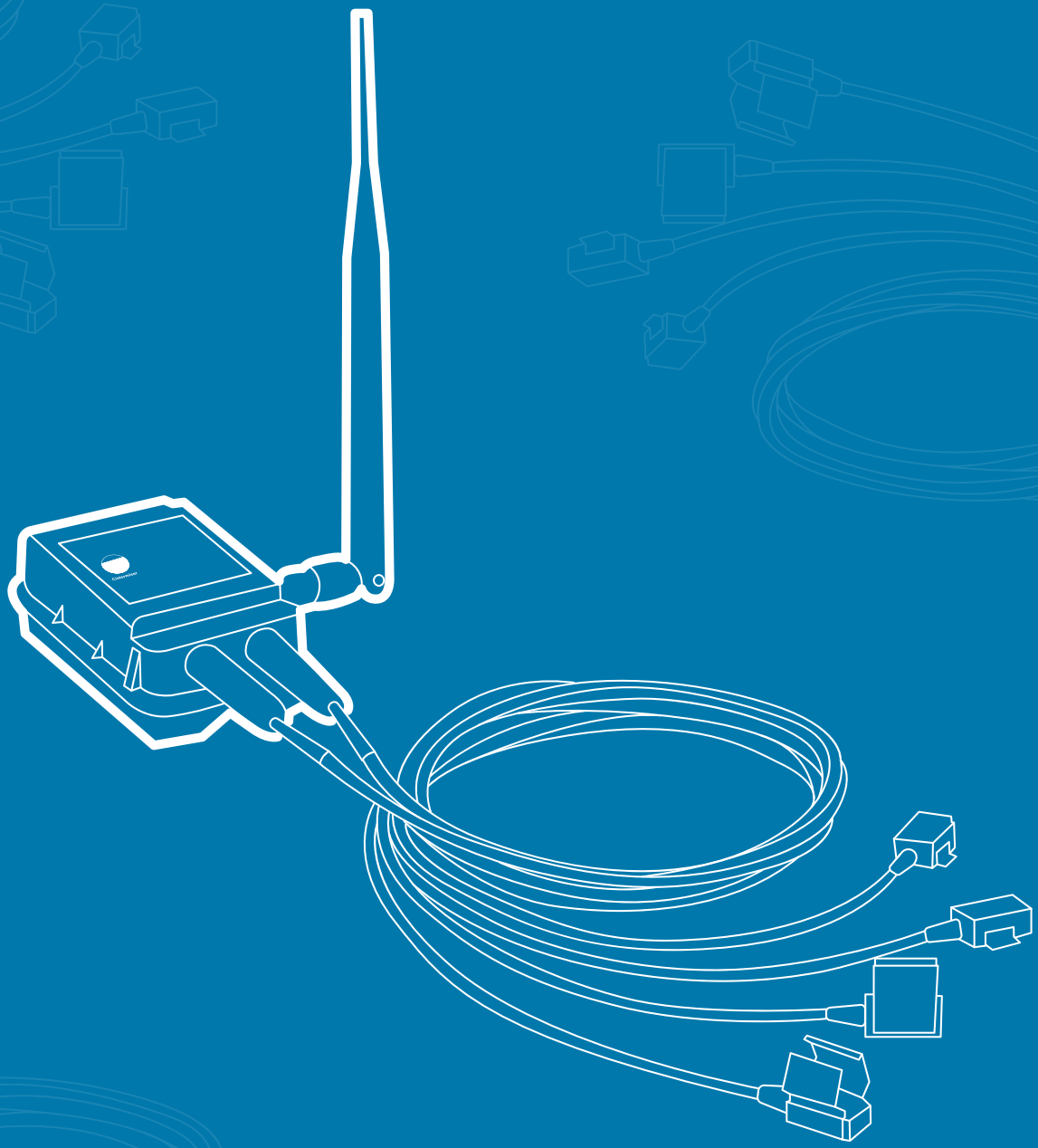

LinkThru TMU

LinkThru TMU harnesses the power of the Internet of Things (IoT) to monitor water temperatures and help to ensure Building Owner compliance with HSG274, reducing the risk of Legionella.

LinkThru TMU is designed to meet the practical temperature monitoring needs of Facilities Management and Maintenance professionals, whilst at the same time providing unbeatable cost-in-use benefits to satisfy Finance requirements.

Advantages include:

- Standalone infrastructure (not reliant on local network), so there's no disruption to existing business systems.
- Low-cost data (via Sigfox network), so inexpensive to install and run.
- Simple to install on pipework, so an ideal retrofit solution.
- Delivers trend analysis and sends alarm reports only by exception, so users are not bombarded with unnecessary data.
- Built for HSE legislation compliance however the data is powerful, so additional benefits include measurement of calorifier efficiency, identification of heat loss and lagging requirements, clarification of water system usage patterns (i.e. most-used washroom facilities) which in turn can fine-tune resource management (e.g. cleaner work-cycle patterns).

Efficiency Through Technology

Approved Code of Practice and Guidance L8 (fourth edition), published by the Health & Safety Executive (HSE) in 2013 with technical guidance published separately in HSG274, seeks to reduce risk in a practical manner. Adoption of the right technology now allows us to be better at what we do – securing truly insightful information means we can improve water safety and reduce risk of Legionella at all times.

Our objectives are precisely defined. Through technology advancement we can improve risk mitigation and reduce costs.

Developed in conjunction with Spica Technologies, LinkThru TMU is not simply "tech for tech's sake", but tech specifically designed to improve process and deliver a tangible business outcome.

spica

The LinkThru temperature monitoring system is running in many estates, including several Healthcare sites in addition to other Public Sector and Commercial premises. Developed through extensive collaboration with Spica Technologies and the involvement of key maintenance and engineering personnel, the platform is powered by Spica Devicepoint® and ensures adherence to HSE technical guidance and approved codes of practice.

Our new web-based software platform, in conjunction with Temperature Monitoring Units, eliminates the need for costly and potentially inaccurate manual measurement tasks, providing a vastly superior picture of likely risks, whilst meeting and exceeding regulatory requirements. LinkThru TMU also records "actual" water system flow event data to provide reliable outlet usage insights and inform risk management.

David Meacock, Technical Director, Cistermiser

Constant Temperature Monitoring

LinkThru TMUs can be fixed in position or moved to provide temperature comparisons, which enable identification of "dead legs" in pipework for example, as part of the Risk Assessment. These devices can be used to monitor outlets, TMVs, incoming mains temperature, cold water storage, calorifiers and other parts of the water system.

Having constant, real-time data allows you to be much more proactive in your management of Legionella risk.

With TMUs positioned as required at key points around your building, LinkThru:

- Delivers real-time data that alerts you to outlets that are at risk and should be investigated.
- Sends automatic notifications to alert staff and help implement proactive risk management.
- Provides a complete on-line history and audit record of all data and associated actions.
- Ensures accurate and constant data capture to give a continual overview of system behaviour, compared to manual once-a-month readings.
- Detects which outlets need to be flushed for at least 2 minutes as part of a control regime and (perhaps more importantly) those that don't – therefore saving water.
- Identifies other risks, such as detecting temperatures that exceed safety threshold limits and pose a risk of scalding or a risk of freezing pipes.
- Reports on outlet usage, detecting outlets that are under-used or locations where outlets have been left running continuously.
- Integrates directly into Building Management Systems such as Maximo, if required, as well as other enterprise applications, e.g. SAP.

Meeting Organisational Needs

From hospitals to commercial offices, the needs of a particular business premises will vary and hurdles to implementing new monitoring technology may seem daunting.

LinkThru TMU addresses many common concerns:

- **Unreliable data**
  Periodic temperature readings recorded manually do not show trends or outlet usage.

  With LinkThru TMU: Continuously recorded water temperature and flow data can be analysed for trends with pre-defined profiles.

- **Access to outlets**
  The temperature monitoring and recording process must not create an infection path.

  With LinkThru TMU: Remote monitoring means that there will no longer be a need for inspectors to enter high-risk wards or busy staff areas.

- **Network integration**
  Local networks are business-critical infrastructures and can have many gatekeepers (e.g. IT/Security/FM/Client/Building Owner).

  With LinkThru TMU: The growth of Machine-to-Machine communication has led to low-cost data networks with no reliance on local networks.

- **Hardware and data costs**
  To cater for businesses large and small, solutions must be scalable.

  With LinkThru TMU: Individual nodes run on a low bandwidth, low-cost Sigfox network, with no local 'gateway'.

- **System integration**
  For large business premises, technology solutions may need to integrate with the existing BMS.

  With LinkThru TMU: The water temperature and flow monitoring system can be completely stand-alone, however it is still possible to integrate into existing BMS and workforce management tools.

- **Changing plumbing system**
  Buildings expand and design and usage of the water system, together with associated areas of risk, may change radically over time.

  With LinkThru TMU: The retrofit clamp-on Temperature Monitoring Units are easily moved, non-invasive, no skilled trades are required and water system outlet usage profiles can be pre-defined (e.g. TMV, flow & return, calorifier, etc).

- **Managing data**
  The legislative need to monitor and record temperature readings in volume is an overwhelming burden and it can be difficult to prioritise staff resources and maintain accurate records.

  With LinkThru TMU: Reports are only flagged by exception (e.g. an alarm event) and a full data log is provided at all times, with an easy-to-use reporting function.

Procurement

LinkThru Temperature Monitoring Units (TMUs) are available to purchase directly from Cistermiser Ltd. In addition to TMU hardware, provision of secure cloud-based 24/7 data services is also available to purchase from Cistermiser on a monthly subscription basis.

Each TMU accepts up to 4 temperature probes (configured as 2 pairs) which simply affix to pipe work surfaces using clips (15mm) or cable-ties (>15mm).

TMUs take temperature samples every 10 seconds (for hot, cold or blended supplies) and automatically begin recording additional data when outlet usage is detected.

Dashboard Portal Views

This example dashboard screen shows monitoring of hot and cold temperatures over a two-day period.

Activation temperature timelines from sensor readings can be easily inspected, to analyse patterns of usage in precise detail.

LinkThru TMU Specifications

Analog Inputs	
Inputs:	2 x 2-way NTC Thermistors
Measurement Range:	-5°C to +90°C
Accuracy:	+/- 1°C
Readings Frequency:	Every 10 seconds
Power	
Battery:	3.6V 8500mAh Li-Metal, non-rechargeable, not field replaceable
Lifetime:	3 to 5 years, dependent on operating mode
Radio	
Frequency:	Sigfox – 868Mhz (unlicensed spectrum)
Protocol:	Sigfox (see http://makers.sigfox.com)
Output Power:	14dBm
Antenna:	External omni-directional antenna
Environmental Requirements	
Operating Temperature:	-30°C to +60°C
Storage Temperature:	-50°C to +85°C
Enclosure	
Ingress Protection:	IP55
Dimensions:	99mm x 60mm x 37.5mm
Security:	Tamper proof screws, tamper label (void if removed)

TMU devices use the Sigfox network to transmit temperature profile information to the LinkThru software platform. There is no requirement to integrate or interfere with any on-site/local IT or networking systems.

The low power required to send messages via Sigfox optimises TMU battery life. Security of TMU wireless communications is ensured through an array of features, including anti-replay, message scrambling and message sequencing.

WND-UK, the UK's Sigfox network operator, are deploying Britain's first dedicated Internet of Things (IoT) network with roll-out planned to provide 95% signal coverage of the UK population.

Cistermiser Limited
Unit 1, Woodley Park Estate,
59-69 Reading Road,
Woodley, Reading,
Berkshire,
RG5 3AN
t: +44 (0) 118 969 1611
e: sales@cistermiser.co.uk

ourworldiswater.co.uk

Cistermiser is a subsidiary of Davidson Holdings Ltd.

E&OE. Cistermiser Ltd reserves the right to amend specifications in this catalogue, as products and services are updated and improved.

SPECCATC Rev3